ziiLUXE

Classic Trim Linear

TracePro Systems

Specifications:

Model number :	TPCLASSIC.T-1715PMMA.OPAL-2500mm
Material :	6063-T5 Anodized Aluminium
Surface processing :	Silver alkali sand oxidation film
Diffuser :	PMMA Opal
Dimensions :	23.2mm(W) x 15.3mm(H) overall
Available lengths :	2500mm
Weight :	520g/2500mm
Application :	Recessed

Suitable TracePro Strip:

- TPS-120-24V9.6W4MM
- TPS-98-24V11W8MM
- TPS-168-24V17.3W10MM

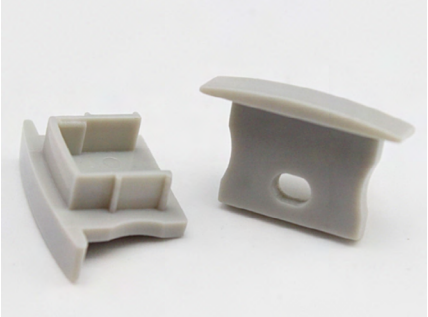

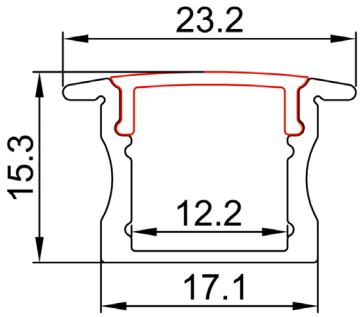

Description:

The TracePro Classic Trim Linear lighting system provides a highly versatile feature lighting solution, compatible with most TracePro Strip options allowing low, mid and high output configurations. Suited for recessed installations to suit a variety of residential, retail and commercial applications.

Features:

- Flat illuminated surface providing consistent illumination.
- Convenient 3.05mm trim along each face edge.
- Easy to install, can be cut to size and staggered to accommodate continuous lengths.
- Compatible with most TracePro strip varieties.
- AL6063-T5 aluminum profile with excellent heat dissipation performance.
- High quality surface treatment and PMMA Opal diffuser.
- Close-fitting mounting clips, end caps with or without cable entry.

*Due to the constancy of product delevopment, we reserve the right to update all specifications without prior notice.

ziiLUXE is a registered trademark of Lime Lighting Pty Ltd. © 2019

ziiLUXE

Classic Trim Linear

TracePro Systems

Suitable TracePro Strip:

☑ TPS-12024V9.6W4MM - ☐ 3000K ☑ 4000K

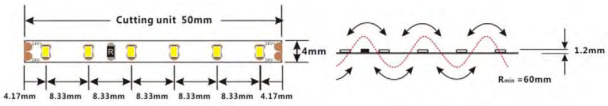

Operating volts :	24V DC Constant Voltage
LED type :	SMD2216
Rated current :	360mA per metre
Power range :	7.9 - 9.6W per metre
Performance :	670lm / 710lm per metre
Lumens per Watt :	78Lm / 82Lm/W
CRI :	>90
Available CT :	3000 / 4000K
Protection rating :	IP33
LED qty/metre :	120pcs
Min. cutting lengths :	50mm
LED pitch :	8.33mm
Dimensions :	5000mm x 4mm x 1.2mm
Standard lead :	2x 120mm per roll
Min. bend diameter :	120mm
Dimmable :	Yes
Warranty:	5 years

☐ TPS-98-24V11W8MM - ☐ 3000K ☐ 4000K

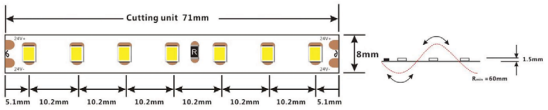

Operating volts :	24V DC Constant Voltage
LED type :	SMD2835
Rated current :	390mA per metre
Power range :	8.7 - 10.1W per metre
Performance :	1147lm / 1183lm per metre
Lumens per Watt :	122Lm / 126Lm/W
CRI :	>80
Available CT :	3000 / 4000K
Protection rating :	IP33
LED qty/metre :	98pcs
Min. cutting lengths :	71mm
LED pitch :	10.2mm
Dimensions :	5000mm x 8mm x 1.5mm
Standard lead :	2x 120mm per roll
Min. bend diameter :	120mm
Dimmable :	Yes
Warranty:	5 years

☐ TPS-168-24V17.3W10MM - ☐ 4000K

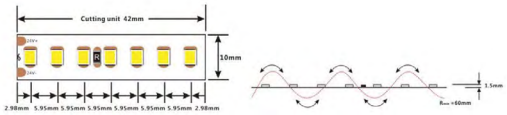

Operating volts :	24V DC Constant Voltage
LED type :	SMD2835
Rated current :	670mA per metre
Power range :	15 - 17.3W per metre
Performance :	2025lm per metre
Lumens per Watt :	125Lm/W
CRI :	>80
Available CT :	4000K
Protection rating :	IP33
LED qty/metre :	168pcs
Min. cutting lengths :	42mm
LED pitch :	5.95mm
Dimensions :	5000mm x 10mm x 1.5mm
Standard lead :	2x 120mm per roll
Min. bend diameter :	120mm
Dimmable :	Yes
Warranty:	5 years

*Due to the constancy of product delevopment, we reserve the right to update all specifications without prior notice.

ziiLUXE is a registered trademark of Lime Lighting Pty Ltd. © 2019

Classic Trim Linear

TracePro Systems

Accessories:

End Caps

PC End Caps suitable for Classic Trim Linear extrusion. Available in 2 piece sets (1x with, 1x without cable entry)

2 piece set ☐ TPCLASSIC.TA-EndCp2x

*Due to the constancy of product delevopment, we reserve the right to update all specifications without prior notice.

ziiLUXE is a registered trademark of Lime Lighting Pty Ltd. © 2019